THIS DRAWING IS THE PROPERTY OF INDUSTRIAL COMBUSTION, DIV. OF AQUA-CHEM, INC.
IT IS SUBJECT TO CHANGE WITHOUT NOTICE, AND IS NOT TO BE COPIED OR USED IN ANY WAY DETRIMENTAL TO THE COMPANY.

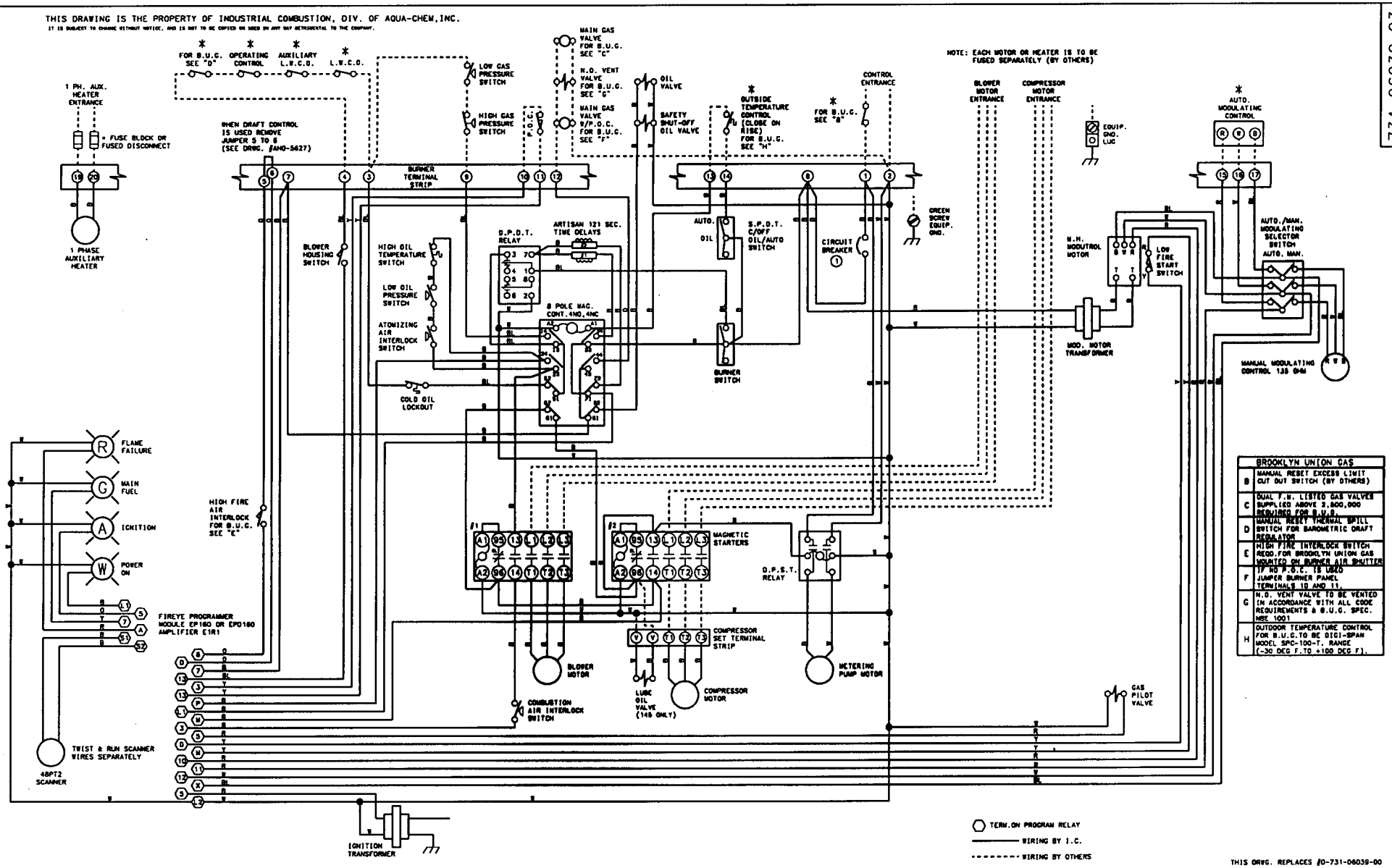

BROOKLYN UNION GAS	
B	MANUAL RESET EXCESS LIMIT CUT OUT SWITCH (BY OTHERS)
C	DUAL F.M. LISTED GAS VALVES SUPPLIED ABOVE 2,800,000 REQUIRED FOR B.U.B.
D	MANUAL RESET THERMAL SPILL SWITCH FOR BAROMETRIC DRAFT REGULATOR
E	HIGH FIRE INTERLOCK SWITCH REQD. FOR BROOKLYN UNION GAS MOUNTED ON BURNER AIR SHUTTER
F	IF NO P.O.C. IS USED JUMPER BURNER PANEL TERMINALS 10 AND 11
G	N.O. VENT VALVE TO BE VENTED IN ACCORDANCE WITH ALL CODE REQUIREMENTS & B.U.G. SPEC. NSE 1001
H	OUTDOOR TEMPERATURE CONTROL FOR B.U.C. TO BE DICI-EPAN MODEL SPC-100-T. RANGE (-30 DEG F. TO +100 DEG F).

WARNING: THESE DRAWINGS ARE TO BE USED ONLY IN CONNECTION WITH EQUIPMENT COMPLYING IN ALL RESPECTS WITH THE ORIGINAL MANUFACTURER'S SPECIFICATIONS. INSTALLER SHOULD INSPECT EQUIPMENT AND ASCERTAIN COMPLIANCE WITH ORIGINAL MANUFACTURER'S SPECIFICATIONS BEFORE USING THESE DRAWINGS. DO NOT USE THESE DRAWINGS IF THE EQUIPMENT HAS BEEN MODIFIED. SUCH USE MAY CAUSE EQUIPMENT FAILURE OR MALFUNCTION WHICH MAY RESULT IN ELECTRICAL SHOCK OR BURNS OR OTHER SEVERE PERSONAL INJURY AND PROPERTY DAMAGE. INDUSTRIAL COMBUSTION DISCLAIMS ANY AND ALL LIABILITY FOR ANY INJURY OR DAMAGE, WHETHER DIRECT, INDIRECT, INCIDENTAL OR CONSEQUENTIAL, RESULTING FROM USE OF THESE DRAWINGS IN CONNECTION WITH EQUIPMENT WHICH DOES NOT COMPLY IN ALL RESPECTS WITH THE MANUFACTURER'S ORIGINAL SPECIFICATIONS.

REVISIONS	
01	11/03/94 CB DPDT RELAY REMOVED
02	12/15/95 KC ARTISAN 121 WAS ADDED
03	08/07/98 CB LUBC OIL VALVE ADDED.

WIRE COLOR	SYMBOL
YELLOW	Y
ORANGE	O
RED	R
BLUE	BL
WHITE	W
BLACK	B

WIRE ALL CIRCUITS N.E.C. CLASS 1; NOT RESPONSIBLE FOR WIRING NOT INSTALLED AT THE FACTORY.

(1) SUPPLEMENTARY LOW OVERCURRENT PROTECTION ONLY. FUSE NOT LARGER THAN 15 AMPS.

* OPTIONAL EQUIPMENT NOT FURNISHED UNLESS SPECIFIED IN CONTRACT.

INDUSTRIAL COMBUSTION
DIVISION OF AQUA-CHEM, INC.

SIZE	DEG-145,175
	LY-190-600/3/60
	CC-120/1/60
DATE	04/01/94
DRAWN	C.E.B.
REV.	D
DWG. #	731-06039-03